PIPELIFE
always part of your life

REQUIREMENTS FOR EXTERNAL CABLE PROTECTION

Cable ducting

An external cable protection system that is intended for cable installation within it and allows for the insertion and removal of the cable. According to the standard EN 61386-24, external cable protection tubes (conduits) are divided into 3 stiffness classes:

- **1250N** - very heavy duty
- **750N** - heavy duty
- **450N** - normal duty

The standard does not define the colour of the cable protection conduits.

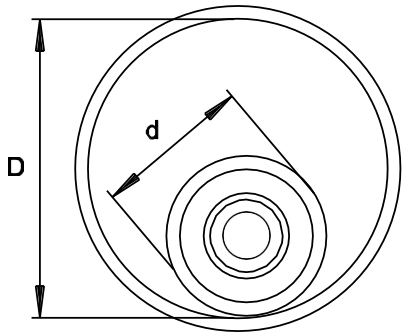

Single-core cable in conduit

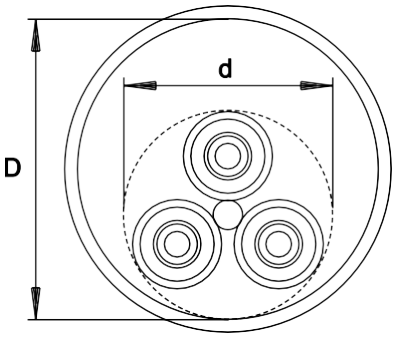

Three-core cable in conduit

Estonian Energy's 0.4-20 kV Network Standard part "20 kV cable lines" defines the installation of cables.

The cable duct must have at least 30% free space (D>1.3d).

For cables installed along the entire length of the duct, it is recommended that D>1.5d.



PIPELIFE
always part of your life

Cable installation in a trench within a protective conduit

The trench is filled with backfill soil, which predominantly does not contain stones/pieces larger than 20 mm. When filling, the soil is compacted around the conduits, considering the subsequent settling of the soil. The cross-sections of trenches that meet normal conditions, the placement of cables within them, and the methods of protection are shown in the following drawings:

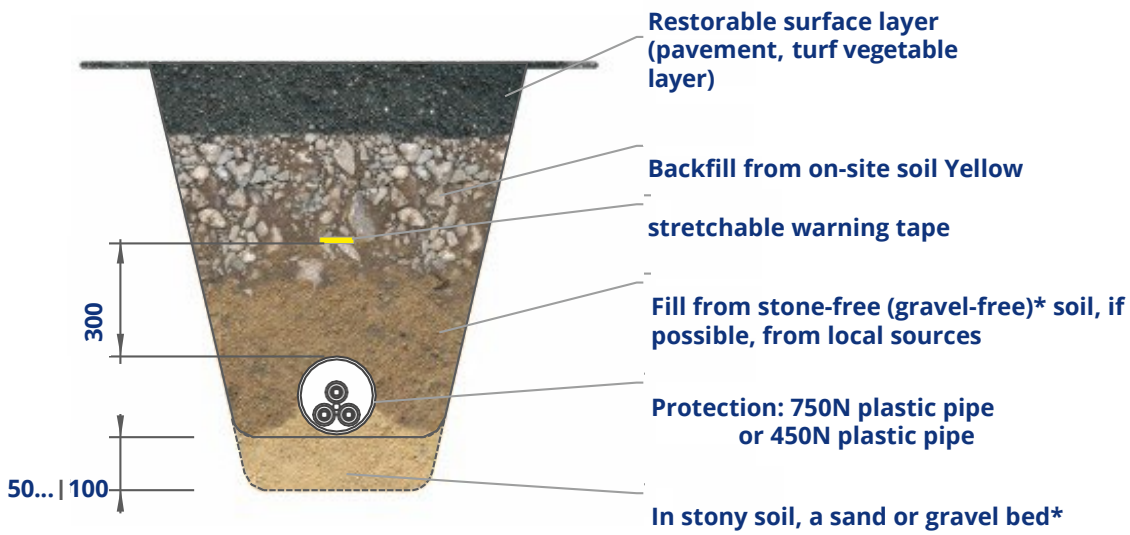

* Gravel is considered to be soil that does not contain stones up to 10 mm in size more than 50%.

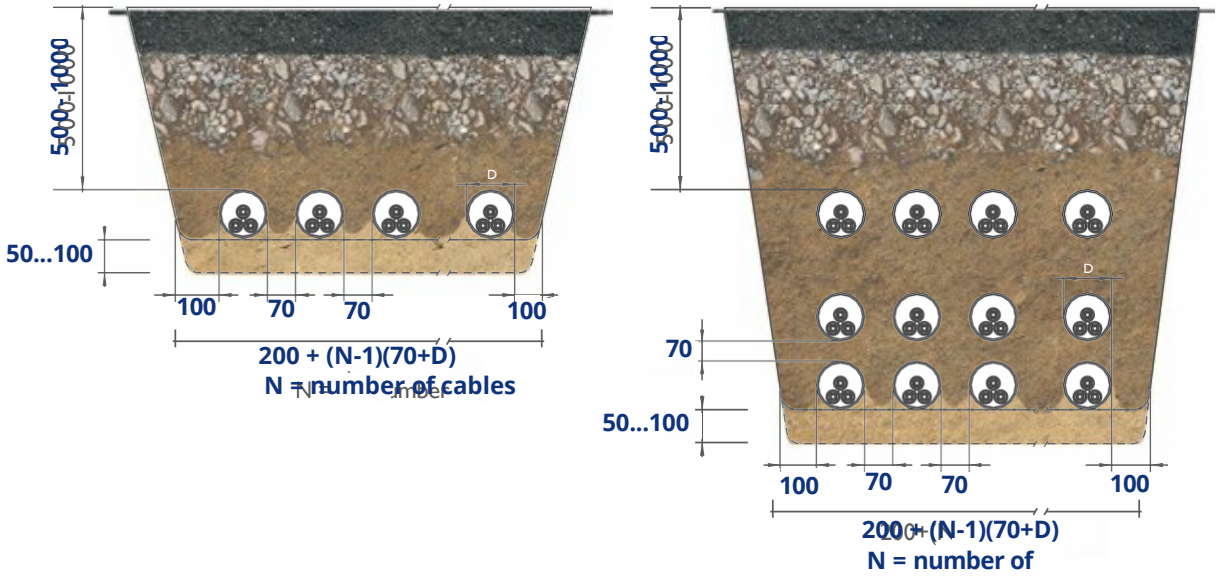

The depth of the cable under the roadway must be at least 1 m.
When filling, compact the soil around the conduits. Consider the subsequent settling of the soil.
Increase the distance between conduits if necessary to meet thermal conditions or for construction considerations. Reduction is also permissible.
For backfilling, local soil that does not contain large (diameter 10 mm) stones may be used for 750N class conduits. In the case of high stone content, make a sand (gravel) bed.

PIPELIFE
always part of your life

PE double-walled cable protection conduits for the construction of electrical and telecommunication networks

The conduit is supplied in 6 m lengths with a coupling. The double-walled cable protection conduit is easy to install due to its lightness and ease of handling. The structure of the conduit allows for small directional changes.

450N cable protection conduits are used in the following cases:

- Generally, in all densely and sparsely populated areas where excavation work is rare.
- At intersections with other underground utilities.
- At intersections with roads, if the distance from the road surface to the cable is at least 1.0 m.
- Under pedestrian and light traffic paths, if the distance from the path surface to the cable is over 0.5 m.

750N cable protection conduits are used in the following cases:

- In areas with numerous nearby underground facilities and frequent excavation work.
- At intersections with roads, if the distance from the road surface to the cable is 0.5...1.0 m.
- Under roadways with heavy traffic, in courtyards and parking areas, or places where there is a high probability of mechanical impact.
- In courtyard and park areas, if the distance from the ground surface to the cable is 0.3...0.5 m.

1250N (SN16) cable protection conduits are used in the following cases:

- Airport areas
- Port areas
- Very heavy duty storage yards and roadways
- Military facilities
- Railway infrastructure

SN16 conduits are marked with red stripes.

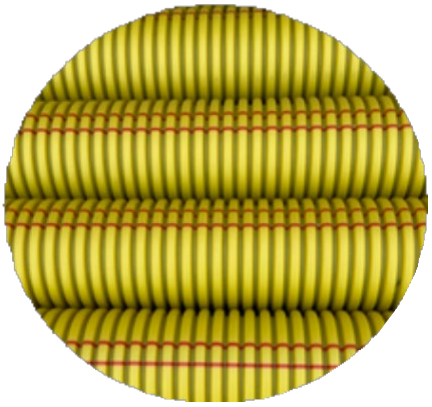

Marking of external cable protection conduit

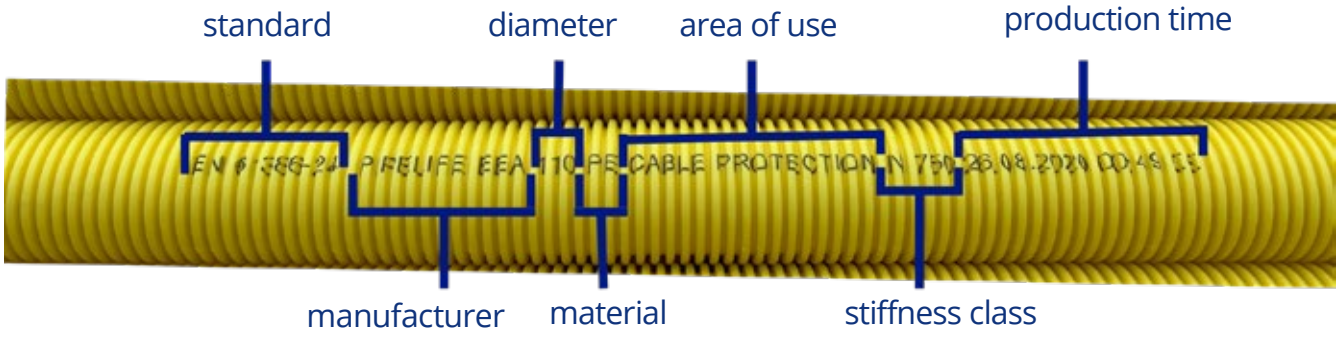

PIPELIFE
always part of your life

Closed installation method (drilling, thrusting)

• The closed installation method is applied at intersections with railways, heavily trafficked roads, and ditches.
• The main requirements for the closed method are shown in the drawing. The parameters for passage are determined depending on the mechanisms available to the builder.

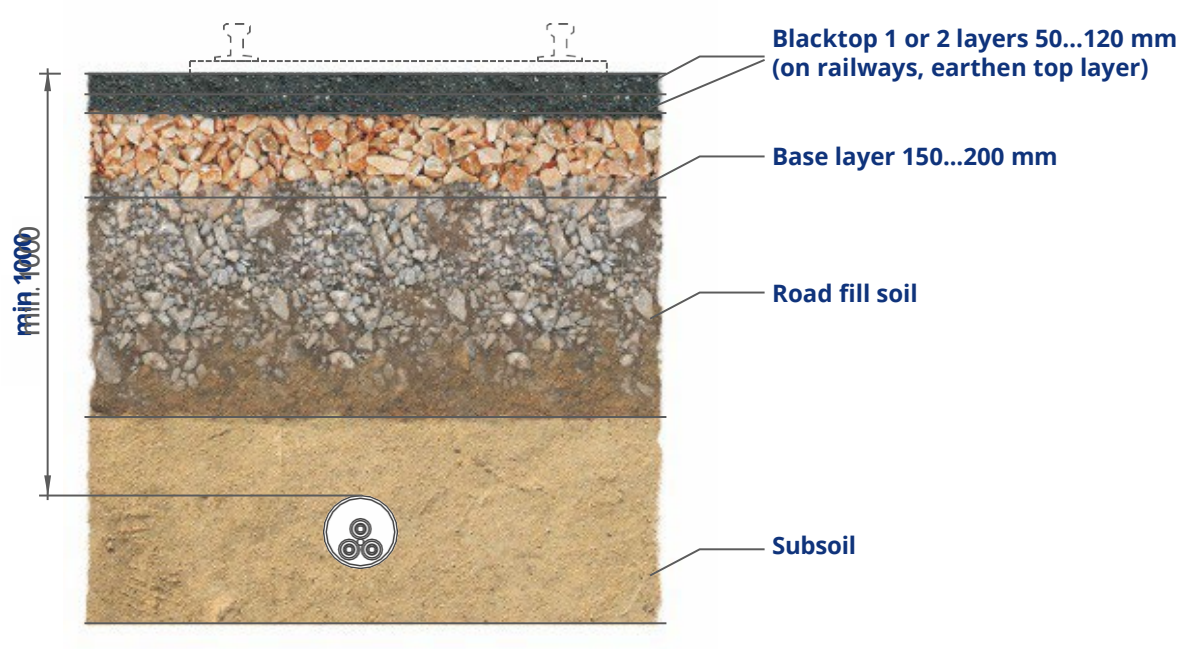

Under local roads and driveways, the minimum depth of the conduit can be a minimum of 700 mm. Install the conduit below the coarse material road fill.
The depth of the conduit is specified in the design documentation depending on the relief and the presence of underground facilities.

